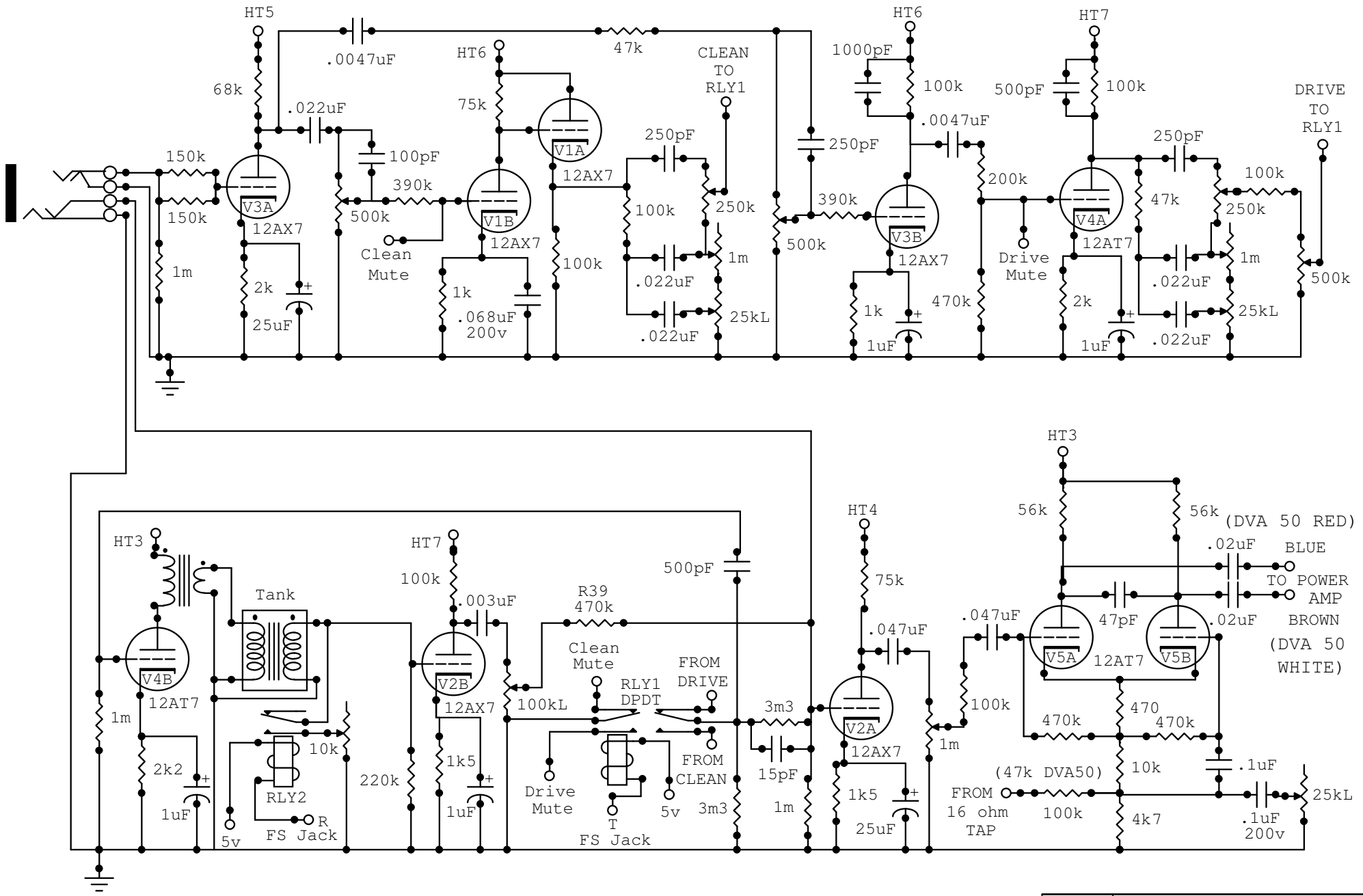

Rev	ID
V 1.0	STANDARD DVA PREAMP
Date: 29 APR '06	Page: 1 of 1